STANDARD SCREENS
PATTERNS: SIPTICAL

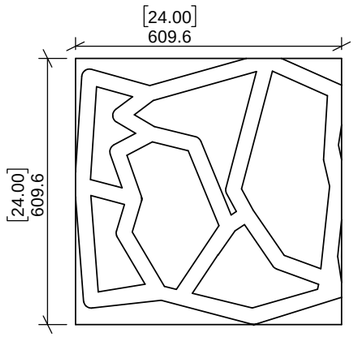

SIPTICAL SCREEN PATTERNS
STANDARD 24" X 24"

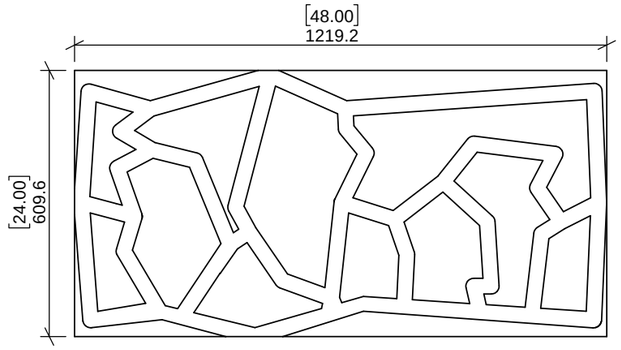

SIPTICAL SCREEN PATTERNS
STANDARD 48" X 24"

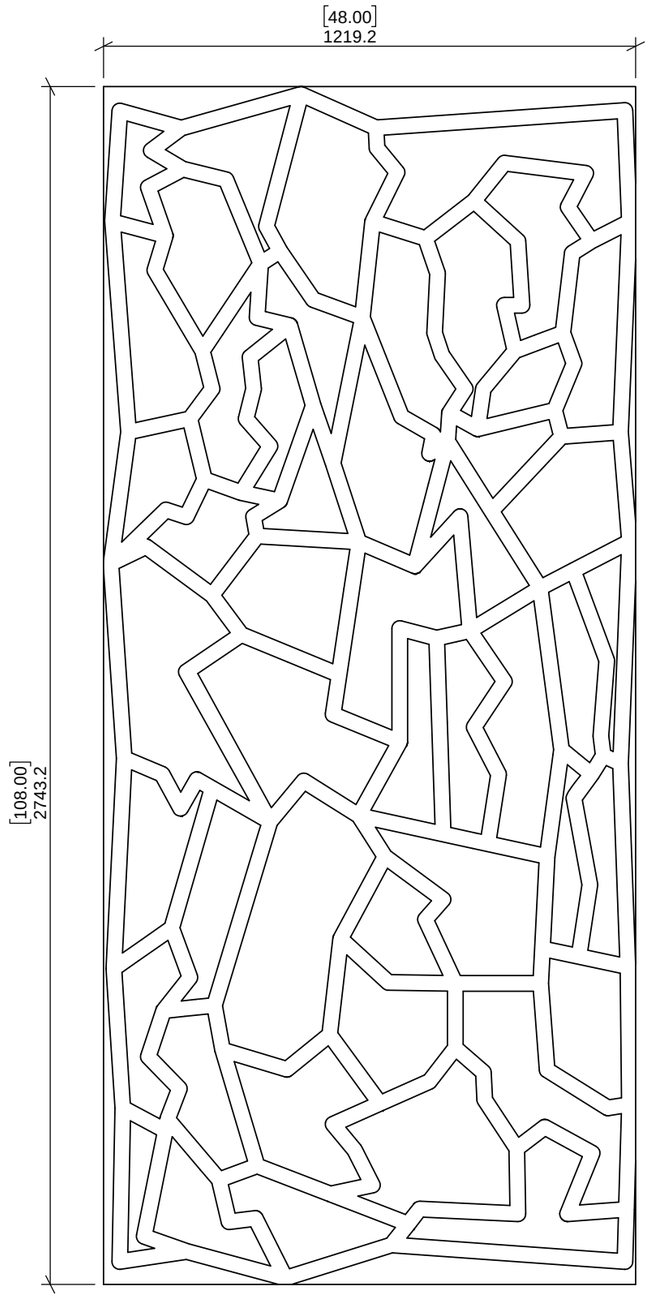

SIPTICAL SCREEN PATTERNS
STANDARD 108" X 48"

MDC
400 High Grove Blvd.
Glendale Heights, IL.
800-621-4006 | mdcwall.com

FINISHES

QTY: AS REQUIRED
thickness: 1" O.A (.5" ZINTRA + 0.5" ZINTRA)
type: ZINTRA PATTERN

design: SIPTICAL
skin: ZINTRA ACOUSTIC AS REQUIRED
core: ZINTRA ACOUSTIC AS REQUIRED

NOTES:

CNC CUT EDGES
COLOUR MAY VARY BETWEEN SHEETS OF ZINTRA
OVERALL THICKNESS MAY VARY DUE TO MANUFACTURE OF ZINTRA

CLIENTS APPROVAL

SIGNATURE DATE

PLEASE MAKE SURE THAT ALL DIMENSIONS AND INFORMATION MATCHES THE PROJECT AND SIGN FOR APPROVAL

client MDC WALLCOVERINGS
address GLENDALE HEIGHTS, IL
title ZINTRA PATTERNS - STANDARD SIZES

order STANDARD PRODUCTS
scale 1:1
date 24/10/2016
revision